KFUPM
Journal of Undergraduate Research International

Diamond Open Access 149

Article Mechanical Engineering

Comparative Performance Analysis of PV and PV–Battery Systems in Major Saudi Cities Using the SAM

Lolwah Alsaleh and Obaidallah Munteshari*

Cite https://doi.org/10.64589/juri/231571

Submitted: April 24, 2026 Revised: May 08, 2026 Accepted: May 13, 2026

ABSTRACT

This study presents a comparative performance analysis of grid-connected photovoltaic (PV) systems with and without lithium-ion battery (LIB) storage across four climatically distinct Saudi cities: Riyadh, Jeddah, Dammam, and NEOM. A 99.25 kW fixed-tilt monocrystalline PV array was modeled in the System Advisor Model using typical meteorological year data from the National Solar Radiation Database. The storage scenario added a 200 kWh/50 kW alternating current (AC)-coupled LIB system dispatched in peak-shaving mode against an adapted Saudi residential load profile. NEOM achieved the highest specific yield of 1,970 kWh/kWp/yr and a capacity factor of 22.5% owing to its high direct normal irradiance (2,544 kWh/m^2/yr) and moderate ambient temperatures. Dammam recorded the lowest specific yield of 1,772 kWh/kWp/yr owing to the higher humidity levels and aerosol optical depth along the Arabian Gulf coast. The performance ratio remained within the range of 78.4–79.1% across all sites, indicating stable system-level efficiency. The battery storage system reduced the net AC energy delivered to the grid by 0.4–1.2% across all sites, with a round-trip efficiency of 91.4–91.5% per cycle. Additionally, the annual CO_2 offsets ranged from 127.3 to 140.5 tons per system.

Keywords: photovoltaic systems, SAM simulation, battery energy storage, specific yield

1. INTRODUCTION

The ongoing structural transformation in the energy sector of Saudia Arabia is driven by rapid population growth, industrial development, and increased electricity consumption. Historically, the Kingdom of Saudi Arabia has relied predominantly on fossil fuels for power generation, which has resulted in high carbon emissions and energy security concerns. Under Vision 2030 and the National Renewable Energy Program, Saudi Arabia aims to diversify its energy mix and achieve 50% electricity generation from renewable sources by 2030 1. The country possesses one of the highest global solar irradiation levels, with Global Horizontal Irradiance (GHI) values exceeding 5.7–6.7 kWh/m^2/day in many regions[2]. This strong solar resource positions photovoltaic (PV) systems as a key technology for sustainable power generation. Additionally, battery energy storage systems are gaining strategic importance for mitigating intermittency, enhancing grid reliability, and improving self-consumption rates[3].

Research into PV systems in desert regions has expanded significantly over the past decade. For instance, Zell et al. performed a detailed assessment of the PV potential at 30 locations across Saudi Arabia using measured solar radiation, reporting annual GHI values between 5.7 and 6.7 kWh/m^2/day[4], and placing the Kingdom among the world's leading regions for solar resources. However, the actual PV output depends on the ambient temperature, humidity, aerosol optical depth, and soiling, which vary markedly between the central desert, Red Sea coast, and Arabian Gulf coast, rendering site-specific assessments essential. Al Yahya and Irfan subsequently developed a ground-station-based solar atlas for Saudi Arabia, revealing that irradiance patterns vary with geography, weather, and air pollution[5], reinforcing the need to evaluate individual site conditions.

To date, various simulation-based assessments using tools such as PVsyst, HOMER, and the System Advisor Model (SAM) have been widely applied to evaluate PV performance in Gulf countries[6]. Khan et al. reported deviations of <2% between SAM and RETScreen outputs when simulating a 600 kW grid-connected PV system in Riyadh, confirming cross-tool consistency for Saudi conditions[6]. Additionally, Almarshoud reported capacity factors between 20 and 22% for fixed-tilt systems in five Saudi cities using PVsyst[7]. Furthermore, Alanazi et al. evaluated hybrid renewable energy systems with fixed-tilt, single-axis, and dual-axis tracker configurations at seven Saudi locations using HOMER and found that tracker systems can increase the annual yield relative to fixed-tilt arrays, albeit at the cost of higher capital and maintenance requirements[8].

Integrating battery energy storage with PV systems enhances on-site self-consumption and facilitates peak shaving, while also deferring the need for grid reinforcement. Shaahid and Elhadidy studied hybrid PV–diesel–battery systems for use in remote areas of Saudi Arabia's Eastern Province and found that while fuel consumption decreased, battery replacement expenses remained

Published under an exclusive license by KFUPM

the dominant cost constraint[9]. More recently, Khan reviewed energy storage technologies and identified lithium iron phosphate (LFP) as the gold standard for stationary storage due to its strong thermal stability, ongoing cost reductions, and excellent cycle stability (>4,000 cycles)[10]. Hesse et al. similarly reviewed a stationary lithium-ion storage system design and highlighted the suitability of LFP for grid-support applications, including self-consumption and peak shaving[3].

In Saudi Arabia, PV systems are exposed to several climate-specific degradation mechanisms. For instance, the performance of crystalline silicon modules declines when cell temperatures exceed the standard test condition (25 °C), with efficiency losses typically ranging from 0.3 to 0.5% per °C increase in cell temperature[11]. Additionally, the high relative humidity and elevated aerosol optical depth along the Arabian Gulf coast reduces beam irradiance and accelerates surface soiling. Ilse et al. reported global soiling losses of ~3–4%/yr under optimized cleaning conditions and higher losses of 4–7% without optimization. Furthermore, they identified dust composition, particle size distribution, and wind regime as key determinants of deposition[12]. Moreover, arid Middle Eastern sites can experience losses exceeding 1%/day if cleaning is neglected[12]. Taken together, these mechanisms indicate that an identical PV design generates different energy outputs across the interior, Red Sea coast, and Arabian Gulf coast. Nevertheless, few studies have comparatively evaluated PV system performance across multiple Saudi climatic zones with a standardized technical configuration and integrated lithium-ion battery (LIB) storage. Existing research is predominantly limited to single-site analyses, often employing different simulation tools and parameter assumptions, while frequently omitting storage integration.

In the current study, a 99.25 kW PV system with a 200 kWh/50 kW alternating current (AC)-coupled LIB is simulated in four Saudi cities—Riyadh, Jeddah, Dammam, and NEOM—under identical technical configurations using the SEM based on typical meteorological year (TMY) weather data from the National Solar Radiation Database (NSRDB). This analysis reports the specific yield, capacity factor, performance ratio, battery round-trip efficiency, self-consumption, peak-shaving contribution, and annual CO_2 offset, with the aim of supporting site-selection guidance aligned with Saudi Arabia's Vision 2030 transition goals[13]. Specifically, this study aims to systematically compare the performance of grid-connected PV systems with and without battery energy storage across representative climatic zones in Saudi Arabia.

2. METHODOLOGY

2.1. Site Selection. Four cities were selected to represent the diverse climatic and geographical conditions of Saudi Arabia: Riyadh (central hot arid inland region), Jeddah (humid western Red Sea coastal region), Dammam (humid eastern Gulf coastal and industrial region), and NEOM (northwestern Red Sea development zone characterized by high direct normal irradiance (DNI)). Table 1 summarizes the geographical and climatic characteristics of the study sites.

2.2. System Specifications. A grid-connected PV system with a nominal capacity of 100 kW (direct current, DC) was modeled using the SAM to ensure consistent comparison among the selected cities. The PV array incorporated a SunPower SPR-E19-310-COM monocrystalline silicon module (rated Standard Test Conditions (STC) power = 310 W), selected from the CEC module library of the SAM, to simulate the array using a detailed PV model with the six-parameter single-diode formulation. The array consists of 16 strings of 20 modules (320 modules total, 99.25 kW DC), which approximate the 100 kW nameplate rating given the integer module count.

A fixed-tilt mounting configuration was adopted for all locations, with the modules oriented south (azimuth angle = 180°). The tilt angle was set equal to the latitude of each site to maximize annual energy production under local climatic conditions. The system was connected to a 100 kW (AC) CEC listed string inverter, yielding a DC/AC ratio of ~1.0. This choice avoids DC clipping for the selected module and array size, and together with the CEC weighted-efficiency curve implemented in the SAM, produces realistic part-load behavior under the irradiance profile of each city. An annual degradation rate of 0.5% and a project lifetime of 25 years were considered during the simulations.

A standard set of system loss assumptions was applied in the SAM to ensure that the differences between cities reflected weather rather than device configuration. The primary loss terms were module mismatch (2%), DC wiring (2%), AC wiring (1%), soiling (5%, selected to represent arid conditions between routine cleanings), nameplate tolerance (1%), and diode and connection losses (0.5%). The inverter performance was modeled using the CEC weighted-efficiency curve implemented in the SAM, which captured the efficiency variation with part-load operation. The Nominal Operating Cell Temperature (NOCT) thermal model was used to estimate the module temperature based on the ambient temperature, irradiance, and wind speed, with a reference NOCT of 45 °C and a power temperature coefficient of −0.40%/°C, consistent with modern monocrystalline silicon modules deployed in high-irradiance environments[11].

For the storage-integrated scenario, a 200 kWh AC-coupled LIB with a 50 kW AC charge/discharge limit was incorporated. The bank was modeled using the lithium-ion cell model of the SAM with a 30% minimum state of charge, a 95% maximum state of charge, and an SAM-reported average round-trip efficiency of ~91.4–91.5% per cycle across the four cities. The battery was operated in peak-shaving mode, configured to discharge only when the site load exceeded instantaneous PV generation, without allowing behind-the-meter export to the grid. Table 2 summarizes the technical specifications of the simulated PV and battery systems.

2.3. SAM Simulation Setup. The PV and PV–battery configurations were simulated using the SAM developed by the National Renewable Energy Laboratory (NREL). Hourly TMY weather files from the NSRDB[14] were employed for each selected city, including the GHI, DNI, diffuse horizontal irradiance (DHI), ambient temperature, relative humidity, and wind speed, with hourly values drawn from Physical Solar Model v3, encompassing the years between 1998 and 2017. A fixed south-facing array layout (azimuth angle = 180°) was consistently applied across all locations, and the tilt angle was set equal to

Table 1. *Geographical and climatic characteristics of the selected study sites*

City	Lat (°N)	Lon (°E)	Region	GHI (kWh/m²/y)	DNI (kWh/m²/y)
Riyadh	24.69	46.70	Central (Inland)	2252	2000
Jeddah	21.49	39.18	Western (Coastal)	2248	1989
Dammam	26.45	50.10	Eastern (Coastal)	2091	1705
NEOM	28.01	35.18	Northwestern (Red Sea)	2274	2544

Table 2. *Technical specifications of the simulated PV and battery system*

Parameter	Value
PV system capacity	100 kW (DC)
Module type	SunPower SPR-E19-310-COM (310 W, mono-c-Si)
Mounting type	Fixed tilt
Tilt angle	Equal to site latitude
Azimuth angle	180°(South-facing)
DC/AC ratio	~1.0
Project lifetime	25 years
Annual degradation	0.5%
Battery capacity	200 kWh
Battery power rating	50 kW
Battery round-trip efficiency	91.4–91.5% (SAM-reported, per cycle)
Cycle life	~5,000 cycles
Minimum SOC	30% (maximum 95%)

the site latitude. All technical settings were maintained identical between cities to ensure that the output differences could be attributed to site climate rather than design choices.

2.4. Load profile and Battery Dispatch Strategy. Representative hourly electric load profiles for the four cities were constructed using a deterministic engineering model anchored to peer-reviewed Saudi-specific data and applied uniformly to a 5,000 m² representative residential cluster to preserve the unified specification framework. Annual energy use intensities (EUIs) were taken from the four-region Saudi residential building stock model of Krarti et al.[15]: 136.0 kWh/m²/yr for Riyadh (Middle region), 159.6 kWh/m²/yr for Jeddah (Western), and 182.4 kWh/m²/yr for Dammam (Eastern). For NEOM, which is not represented in the four-region partition, the EUI was scaled from the Middle region value using the cooling degree day ratio (CDD) relative to Tabuk, the nearest city to NEOM with published climate data (NEOM lies within Tabuk Province; CDD = 2,422 °C•day), yielding 104.2 kWh/m²/yr[16]. Cooling was assumed to constitute 65% of total residential electricity[17]. Profiles were rescaled to match the city-specific annual energy targets and exported as 8,760-row time series for direct import into the electric load module of the SAM.

2.5. *CO_2 Emission Offset*. Although CO_2 reduction is not a primary focus of this study, an indicative annual CO_2 offset can be estimated to provide environmental context. The offset was calculated by multiplying the simulated annual PV energy output

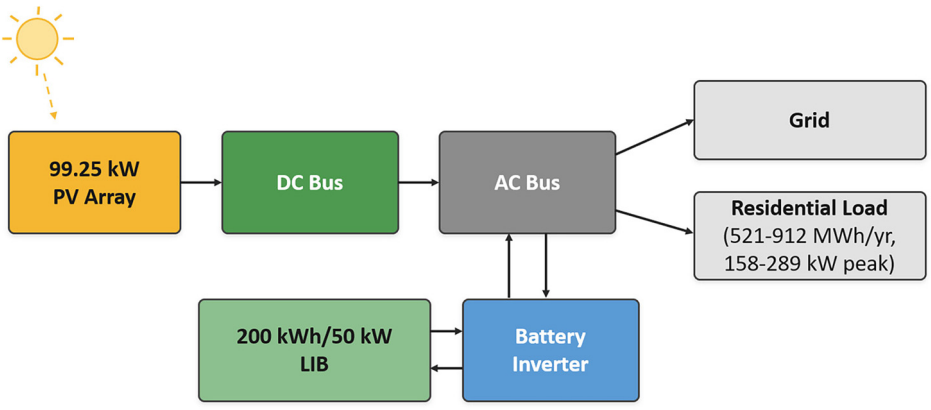

Figure 1. Schematic representation of the simulated PV–battery system configuration

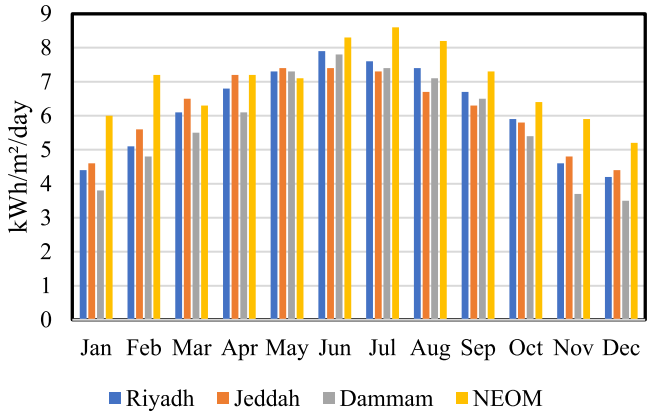

Figure 2. Monthly average daily GHI (kWh/m^2/day) for the selected cities

(kWh/yr) by a Saudi grid emission factor of 0.727 kg CO_2/kWh, based on the three-year average (2013–2015) reported by the International Energy Agency for Saudi Arabia's electricity and heat generation [18], then converting to tons:

$$\text{CO}_2 \text{ offset (tons/yr)} = \text{Annual Energy (kWh/yr)} \times 0.727 \times 10^{-3}. \quad (1)$$

3. RESULTS AND DISCUSSION

3.1. Monthly Solar Resource Variation. Figure 2 shows the monthly average daily GHI values for the selected cities, revealing that the solar irradiance increased gradually from winter to summer, reaching peak values from May to July across all locations. Higher irradiance levels were observed in NEOM, whereas coastal cities such as Jeddah and Dammam exhibited slightly lower values owing to humidity and atmospheric effects.

3.2. PV System Performance. Table 3 summarizes the annual performance of the PV-only system (99.25 kW DC, 100 kW AC inverter) over the four study sites. NEOM delivered the highest specific yield of 1,970 kWh/kWp/yr with a DC capacity factor of 22.5%. The combination of a high annual global horizontal irradiance of 2,273 kWh/m_2/yr and a moderate mean ambient temperature of 27.3 °C limits module thermal de-rating, accounting for the superior results obtained for NEOM, despite its modest irradiance advantage. Performance Ratio (PR) and Capacity Factor (CF) are standard PV performance metrics used to evalute system performance.b Riyadh delivered the second highest specific yield, 1,905 kWh/kWp/yr (Capacity Factor (CF) = 21.8%), ~3.3% below that of NEOM, as its hotter inland summers elevate cell temperatures during the months of highest irradiance. Dammam recorded the lowest specific yield of 1,772 kWh/kWp/yr (CF = 20.2%), ~10.1% below that of NEOM. This shortfall mirrors the lower GHI of 2,093 kWh/m^2/yr, which reflects the higher aerosol optical depth and more frequent coastal haze in the Eastern Province. Jeddah lies between these extremes at 1,870 kWh/kWp/yr (CF = 21.4%). Its Red Sea climate raises the annual mean ambient temperature to 30.5 °C which offsets much of the irradiance that would otherwise place it close to Riyadh. Additionally, the performance ratio is tightly clustered between 78.4% (Riyadh) and 79.1% (Dammam), despite their distinctive climates, confirming that the loss stack is dominated by configuration-independent terms (i.e., soiling, module conversion, wiring, and inverter) rather than by the weather. The slightly higher PR obtained for Dammam reflects its lower plane-of-array irradiance interacting with the NOCT thermal model. Consequently, cooler modules partially compensate for the lower incident resource.

3.3. PV--Battery System Performance. Table 4 details the annual performance of the PV–battery configuration, wherein a 99.25 kW PV array was paired with a 200 kWh/50 kW AC-coupled LIB operating under the peak shaving mode of the SAM. City-specific load profiles were constructed using a single methodology to ensure that between-city differences reflected both the local solar resource and the climatically driven load shape. Battery incorporation reduces the net AC energy delivered by the plant by a small, consistent amount in every city, as a fraction of the PV output is routed through the battery and subject to round-trip losses. The corresponding reductions were 1,483 kWh/yr (−0.78%) in Riyadh, 1,156 kWh/yr (−0.62%) in Jeddah, 770 kWh/yr (−0.44%) in Dammam, and 2,322 kWh/yr (−1.19%) in NEOM.

Therefore, operationally, the battery requires a small amount of annual energy in exchange for its peak-shaving capability. In every city, the battery is charged almost entirely by the PV array, with >99.9% of annual charging supplied by system generation with zero grid charging. Additionally, under peak-shaving logic, the battery only discharges when the site load exceeds instantaneous PV generation. The annual charge-from-PV/discharge-to-load were recorded as 16.7/15.3 MWh in Riyadh, 12.7/11.6 MWh in Jeddah, 8.1/7.3 MWh in Dammam, and 26.9/24.6 MWh in NEOM. Since the city-specific residential loads (521–912 MWh/yr) range from 2.7×to 4.7×of the annual PV output, the PV array is fully absorbed on-site at each location. Therefore, the PV–battery system operates as a partial-offset generator under this load, rather than as a grid-export plant.

The SAM-reported average round-trip efficiency was comparable across the four sites, ranging from 91.4% at Dammam to 91.5% at NEOM. However, the annual battery throughput varied considerably between cities: 8.1 MWh charged from PV at Dammam, 12.7 MWh at Jeddah, 16.7 MWh at Riyadh, and 26.9 MWh at NEOM, representing a 3.3×range driven by the magnitude of the daytime PV-load surplus. The reduction in net AC energy delivered was 0.4–1.2% across the four sites. Additionally, battery discharge-to-load ranged from 7.3 MWh/yr (Dammam) to 24.6 MWh/yr (NEOM). Relative to city-specific annual loads of 521–912 MWh, the battery supplied 0.8–4.7% of total load energy and reduced summer afternoon peaks to 158–289 kW. Self-consumption remained uniformly high (91.0–98.3% of PV output), whereas self-sufficiency varied markedly by city, from 18.9% at Dammam (heaviest cooling load) to 33.7% at NEOM (lowest load). The energy values in Table 4 refer to the net AC energy delivered by the plant after passing through the peak-shaving battery dispatch and are therefore slightly lower than the corresponding results in Table 3.

3.4. CO_2 Emission Offset Results. Figure 3 presents the estimated annual CO_2 emission offsets in each city operating a PV–battery system. The offsets were calculated by multiplying

Table 3. *Annual performance results for the PV-only system (100 kW DC)*

City	Annual Energy (kWh/yr)	Specific Yield (kWh/kWp/yr)	Cap. Factor (%)	Perf. Ratio (%)
Riyadh	189,111	1,905	21.8	78.4
Jeddah	185,593	1,870	21.4	78.5
Dammam	175,902	1,772	20.2	79.1
NEOM	195,522	1,970	22.5	78.9

Table 4. *Annual AC energy generated by the PV–battery system after battery round-trip and auxiliary losses*

City	Annual energy (kWh/yr)	Specific yield (kWh/kWp)	CF (%)	Round trip efficiency (%)
Riyadh	187,628	1,890	21.6	91.5
Jeddah	184,437	1,858	21.2	91.5
Dammam	175,132	1,765	20.1	91.4
NEOM	193,200	1,947	22.2	91.5

the net annual energy delivered to the grid by a Saudi grid emission factor of 0.727 kg CO_2/kWh, equal to the three-year average (2013–2015) published by the International Energy Agency for Saudi Arabia's electricity and heat sector[18]. This factor reflects the current carbon intensity of the generation mix, dominated by natural gas and heavy fuel oil. Dammam recorded the lowest offset at 127.3 tons (c.f., the highest offset of 140.5 tons recorded for NEOM), consistent with its reduced net energy production. The obtained values reflect the direct displacement of grid electricity, which does not include the lifecycle emissions created during PV module manufacture and battery production. Therefore, while PV and PV–battery systems significantly reduce operational emissions, a comprehensive environmental assessment should consider the full lifecycle impacts.

3.5. Influence of Climatic Conditions on PV Performance. Table 5 illustrates the influence of local climate conditions on PV system performance across the four study sites. NEOM achieved the highest specific yield of 1,970 kWh/kWp/yr. This was attributed to two main factors, namely its high DNI of 2,544 kWh/m^2/yr, which is the highest among all sites, and its ability to maintain moderate temperatures, lower than those observed in inland urban areas. NEOM, located at 28°N along the Red Sea coast near the Gulf of Aqaba, experiences cooler temperatures than Riyadh and lower humidity levels than both Jeddah and Dammam, contributing to more favorable operating conditions for PV modules.

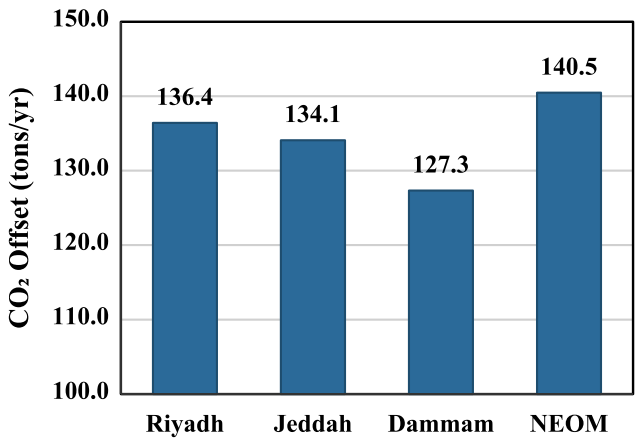

Figure 3. Annual CO_2 emission offsets under the PV–battery configuration

Additionally, Riyadh achieved a specific yield of 1,905 kWh/kWp/yr, which represents a decrease of 3.3% compared with NEOM, despite having the second-highest GHI of 2,252 kWh/m^2/yr. This discrepancy was attributed to the higher daytime temperatures experienced by Riyadh, which typically reach >45 °C during the summer months. Consequently, cell performance is reduced due to these higher operational temperatures. Notably, the standard temperature coefficient of −0.4%/°C for monocrystalline silicon modules results in an efficiency reduction of ~4% when the cell temperature rises by 10 °C above the standard test condition of 25 °C.

Dammam achieved the lowest specific yield of 1,772 kWh/kWp/yr, representing a 10.1% decrease compared with NEOM. The location of Dammam in the Eastern Province along the Arabian Gulf gives rise to two factors that limit performance: (i) higher relative humidity, which increases the proportion of diffuse radiation while reducing the beam components available to fixed-tilt modules, and (ii) industrial activity and maritime aerosols, which lead to higher aerosol optical depth and consequently reduce incoming irradiance. The GHI value at Dammam was 2,091 kWh/m^2/yr, indicating lower resource availability due to atmospheric attenuation effects.

3.6. Performance Ratio and loss Mechanisms. The SAM loss decomposition (Figure 4) revealed a consistent ranking of loss mechanisms across the four cities. The dominant single contribution at every site was the PV conversion loss (reflecting combined temperature and irradiance effects on the CEC module), which accounted for ~10.2% of the plane of array (POA) energy in Riyadh, 10.1% in Jeddah, 9.8% in NEOM, and 9.2% in Dammam. This ranking reflects the combined influence of operating cell temperature and clear-sky irradiance: Riyadh's hot, dry inland climate produces the largest weighted cell-temperature derating, whereas Dammam's higher humidity and coastal aerosol loading reduce the effective POA at which high cell temperatures occur, resulting in the smallest module loss. Soiling was modeled uniformly across sites using the SAM

Table 5. *Comparative climate and PV performance indicators for the four cities. Δ vs NEOM represents the percentage change in specific yield relative to the best-performing site*

Indicator	Riyadh	Jeddah	Dammam	NEOM
Annual GHI (kWh/m²/yr)	2,252	2,248	2,091	2,274
Annual DNI (kWh/m²/yr)	2,000	1,989	1,705	2,544
Mean ambient temperature (°C)	26.4	30.5	27.6	27.3
Specific yield (kWh/kWp/yr)	1,905	1,870	1,772	1,970
Δ vs NEOM (%)	−3.3	−5.1	−10.1	0.0

default annual profile; therefore, the per-city differences observed in the figure arise from interactions between that profile and the irradiance distribution of each location, rather than from variations in dust accumulation. Module cover, DC mismatch, and DC and AC wiring losses are determined by component specifications (≤2% each) and therefore remain relatively constant between cities. Combined Inverter losses from nighttime tare, power-limiting (clipping), and part-load efficiency remain <1% at all sites, as the system is sized with a DC/AC ratio of 1.0, effectively eliminating hard clipping. Collectively, these mechanisms yield a narrow performance-ratio range of 78.4–79.1% across the four locations.

3.7. Advantages and Limitations of Battery Integration. As shown in Figure 5, the incorporation of a 200 kWh/50 kW AC-coupled LIB to the 99.25 kW PV array had only a small impact on the net energy balance under the peak-shaving dispatch strategy adopted in this study. The battery operates against city-specific Saudi residential loads (521–912 MWh/y annual demand, 158–289 kW peaks), charging from PV surplus and discharging during the afternoon peak-demand window within an SOC band of 30–95%. Since the residential loads are 2.7–4.7 times higher than the array output, battery throughput was limited by the daytime PV–load surplus rather than by battery capacity. The net AC energy delivered in the PV–battery case is therefore ~770–2,322 kWh/yr lower than in the PV-only case (0.4–1.2%), corresponding to 187,628 kWh in Riyadh, 184,437 kWh in Jeddah, 175,132 kWh in Dammam, and 193,200 kWh in NEOM. This small deficit reflects round-trip and auxiliary losses associated with the cycled energy, consistent with the SAM-reported average round-trip efficiency of 91.4–91.5% per cycle.

The 200 kWh/50 kW battery provides ~4 h of storage at its rated power. As the modeled residential loads are 2.7–4.7 times higher than the on-site PV output, the storage duty is limited to trimming short evening peaks, and the economic benefit from avoided demand charges is not reflected in the current energy balance. Future studies should therefore incorporate site-measured building load profiles (e.g., office, retail, or industrial) alongside time-of-use energy tariffs and demand-charge structures, enabling meaningful quantification of the battery contributions to self-consumption, peak shaving, and economic value in Saudi commercial applications.

The four-city comparison revealed climatic asymmetry, with direct implications for PV–battery deployment in Saudi Arabia. NEOM demonstrated the highest specific yield (1,947 kWh/kWp/yr) and the lowest annual load (521 MWh/yr), resulting in the highest self-sufficiency (33.7%) and largest annual battery throughput (26.9 MWh charged from PV). Dammam presented the opposite case, with the lowest yield (1,765 kWh/kWp/yr), highest cooling-driven load (912 MWh/yr), lowest self-sufficiency (18.9%), and smallest battery throughput (8.1 MWh/yr). These outcomes indicate that storage value is strongly site-dependent: at NEOM, the battery cycles intensively against a manageable load, potentially justifying a larger pack, whereas at Dammam, the high cooling load

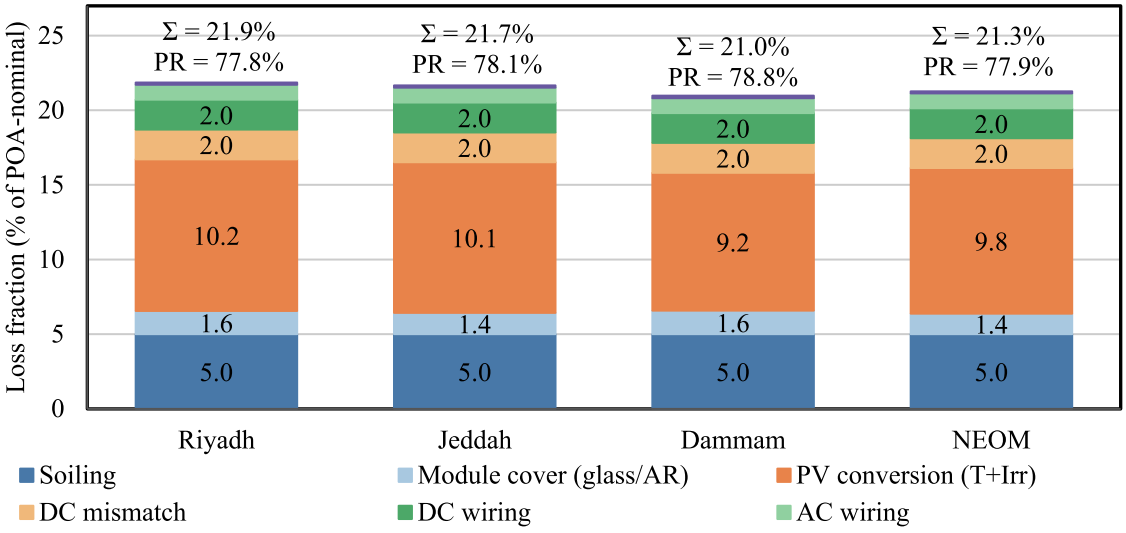

Figure 4. Decomposition of the annual system losses (% of POA irradiance)

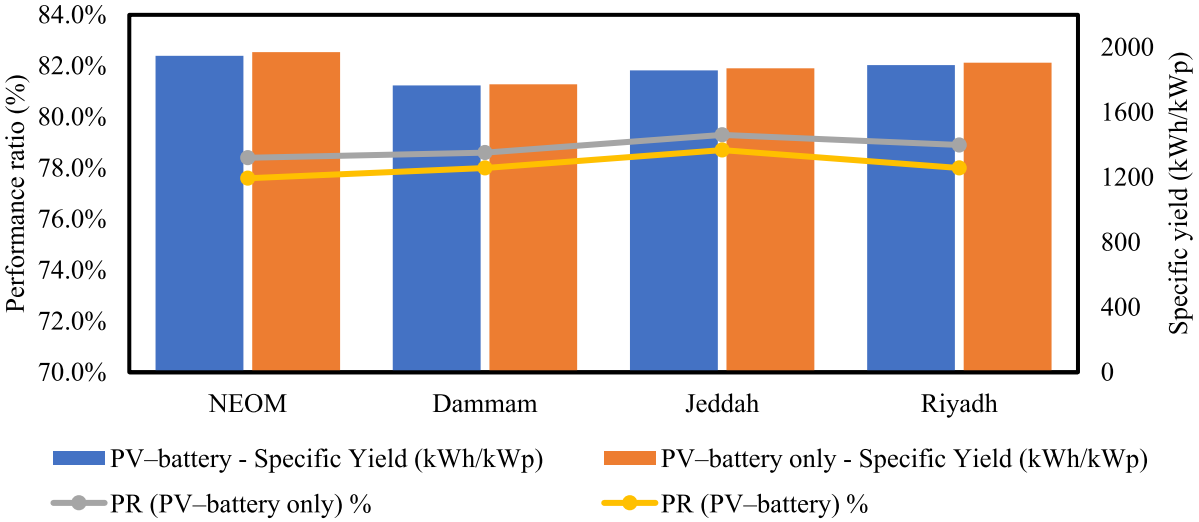

Figure 5. Performance ratios (lines, left-axis) and specific yields (bars, right-axis) of the PV-only and PV + 200 kWh/50 kW LIB configurations in each city

renders PV capacity the limiting factor, and increasing the array size would provide greater benefit than enlarging the battery. Coastal sites (Jeddah, Dammam) incur a yield penalty of ~5–10% relative to inland sites due to humidity and aerosol loading, highlighting the potential benefits of module coatings and frequent cleaning strategies. Overall, these results suggest that a uniform PV–battery sizing approach is suboptimal across Saudi Arabia, and deployment should be tailored to local load profiles, climatic conditions, and tariff structures, with site-specific load measurements and tariff-aware dispatch logic recommended for future studies.

3.8. Study Limitations. The current study has multiple limitations that must be considered during interpretation of its findings. First, the study employed TMY weather data, which provide only long-term average weather conditions without considering annual weather changes and extreme weather events (e.g., sandstorms and heatwaves) that can impact short-term PV performance. Second, the load profiles were constructed deterministically from regional energy-use intensities [15,17] rather than from measured site-specific data. The actual self-consumption and peak-shaving values may therefore differ for individual buildings with atypical occupancy or heating, ventilation, and air conditioning schedules. Third, soiling was modeled using the default assumptions of the SAM, which led to inaccurate loss estimations for Riyadh and Dammam because of their high dust deposition rates.

4. CONCLUSIONS

These findings can support site-specific planning and optimization of PV–battery deployments in Saudi Arabia, contributing to more efficient renewable energy integration under Vision 2030. This study simulated the yearly operational efficiency of a 99.25 kW grid-connected PV system with and without a 200 kWh/50 kW AC-coupled LIB across four different climate zones in Saudi Arabia, namely Riyadh, Jeddah, Dammam, and NEOM. The SAM was employed to conduct a simulation using TMY weather data provided by the NSRDB. All four cities maintained environmental conditions that enabled the successful operation of large-scale PV systems. The annual specific yield ranged from 1,772 kWh/kWp/yr at Dammam to 1,970 kWh/kWp/yr at NEOM. These values establish competitive performance standards that match the global operational benchmarks employed in utility-scale PV systems. NEOM emerged as the most favorable location, driven by its combination of a high DNI, moderate ambient temperatures, and lower atmospheric attenuation compared to the Gulf coastal sites. Although Riyadh benefited from strong solar irradiance, its high summer temperatures reduced the overall device performance. Under the peak-shaving dispatch strategy used in this study, the addition of a 200 kWh/50 kW AC-coupled LIB reduced the net AC energy delivered by the system by 0.4–1.2% (770–2,322 kWh per year). Moreover, the battery operated against city-specific Saudi residential loads derived from peer-reviewed building stock data (521–912 MWh/yr annual demand, 158–289 kW peak loads). The reduction in delivered energy was attributed to the round-trip and auxiliary losses associated with battery cycling, with an average round-trip efficiency of 91.4–91.5% per cycle. The majority of PV energy was consumed on site, with only 1.6–9.0% exported to the grid, depending on the magnitude of the local load (self-consumption 91–98%; self-sufficiency 19–34%). Additionally, these systems achieved estimated annual CO_2 reductions of 127–141 tons per 100 kW of installed capacity. Optimized battery to PV sizing, for each desert microclimate in particular kind of, makes it possible to reach very high self consumption rates around 91–98%, plus practical peak shaving benefits. For Saudi Arabia's grid stabilization this is a direct help. Overall these results back up regional grid codes and also reduce investment risk , so it moves things forward for Saudi Vision 2030 and the Green Initiative goals.

AFFILIATIONS AND AUTHOR DETAILS

Undergraduate Author

Lolwah Alsaleh – *Department of Mechanical Engineering, King Fahd University of Petroleum & Minerals, Dhahran 31261,*

Saudi Arabia; 0009-0009-4924-6961
Email: s202353090@kfupm.edu.sa;

Corresponding Author

Obaidallah Munteshari – *Department of Mechanical Engineering, King Fahd University of Petroleum & Minerals, Dhahran 31261, Saudi Arabia*; 0000-0003-3587-4632
Email: obaidallah@kfupm.edu.sa

REFERENCES

(1) Beyer, J. & Gitonga, S. The Saudi shift: laying the groundwork for a clean energy future. *United Nations Development Programme (UNDP)* https://www.undp.org/saudi-arabia/press-releases/saudi-shift-laying-groundwork-clean-energy-future (2025).

(2) Mian, S. H. *et al.* Mechanisms for Choosing PV Locations That Allow for the Most Sustainable Usage of Solar Energy. *Sustainability (Switzerland)* **15**, (2023).

(3) Hesse, H. C., Schimpe, M., Kucevic, D. & Jossen, A. Lithium-ion battery storage for the grid - A review of stationary battery storage system design tailored for applications in modern power grids. *Energies* vol. 10 Preprint at https://doi.org/10.3390/en10122107 (2017).

(4) Zell, E. *et al.* Assessment of solar radiation resources in Saudi Arabia. *Solar Energy* **119**, 422–438 (2015).

(5) AlYahya, S. & Irfan, M. A. Analysis from the new solar radiation Atlas for Saudi Arabia. *Solar Energy* **130**, 116–127 (2016).

(6) Khan, S. U. D., Wazeer, I. & Almutairi, Z. Comparative Analysis of SAM and RETScreen Tools for the Case Study of 600 kW Solar PV System Installation in Riyadh, Saudi Arabia. *Sustainability (Switzerland)* **15**, (2023).

(7) Almarshoud, A. F. Performance of solar resources in Saudi Arabia. *Renewable and Sustainable Energy Reviews* vol. 66 694–701 Preprint at https://doi.org/10.1016/j.rser.2016.08.040 (2016).

(8) Alanazi, M. *et al.* A Comprehensive Study on the Performance of Various Tracker Systems in Hybrid Renewable Energy Systems, Saudi Arabia. *Sustainability (Switzerland)* **15**, (2023).

(9) Shaahid, S. M. & Elhadidy, M. A. Economic analysis of hybrid photovoltaic–diesel–battery power systems. *Renewable and Sustainable Energy Reviews* **12**, 488–503 (2008).

(10) Khan, S. H. Energy storage systems for deep decarbonization: A critical review. *J. Energy Storage* **150**, 120485 (2026).

(11) Dubey, S., Sarvaiya, J. N. & Seshadri, B. Temperature dependent photovoltaic (PV) efficiency and its effect on PV production in the world - A review. in *Energy Procedia* vol. 33 311–321 (Elsevier Ltd, 2013).

(12) Ilse, K. *et al.* Techno-Economic Assessment of Soiling Losses and Mitigation Strategies for Solar Power Generation. *Joule* vol. 3 2303–2321 Preprint at https://doi.org/10.1016/j.joule.2019.08.019 (2019).

(13) Saudi Vision 2030. https://www.vision2030.gov.sa/en/explore/programs/national-transformation-program (2025).

(14) Sengupta, M. *et al.* The National Solar Radiation Data Base (NSRDB). *Renewable and Sustainable Energy Reviews* vol. 89 51–60 Preprint at https://doi.org/10.1016/j.rser.2018.03.003 (2018).

(15) Krarti, M., Aldubyan, M. & Williams, E. Residential building stock model for evaluating energy retrofit programs in Saudi Arabia. *Energy* **195**, (2020).

(16) Krarti, M., Dubey, K. & Howarth, N. Evaluation of building energy efficiency investment options for the Kingdom of Saudi Arabia. *Energy* **134**, 595–610 (2017).

(17) Aldubyan, M. Future of residential electricity demand in Saudi Arabia and the role of energy efficiency in 2060′s net zero pledge. *Development and Sustainability in Economics and Finance* **8**, (2025).

(18) International Energy Agency. *CO2 Emissions from Fuel Combustion: Highlights*. https://www.oecd.org/content/dam/oecd/en/publications/reports/2017/10/co2-emissions-from-fuel-combustion-2017_g1g7ca18/co2_fuel-2017-en.pdf (2017).